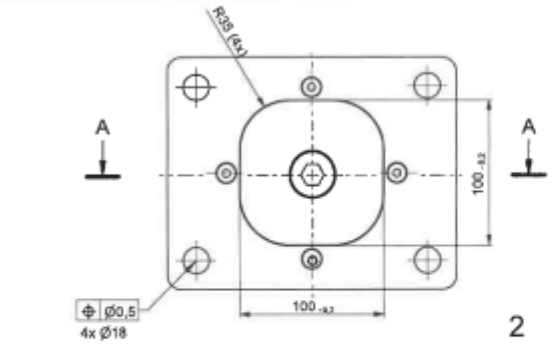

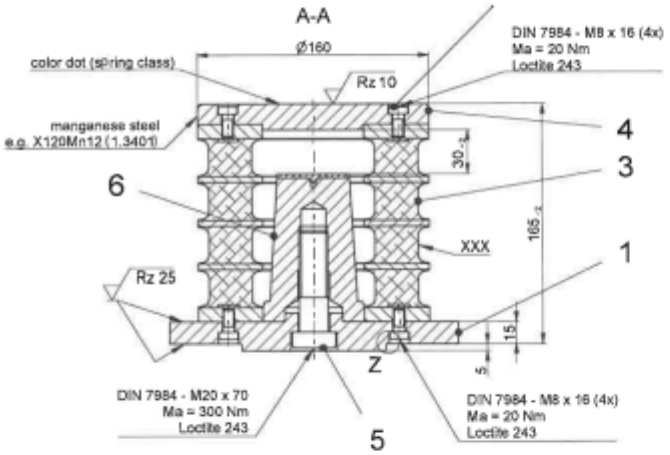

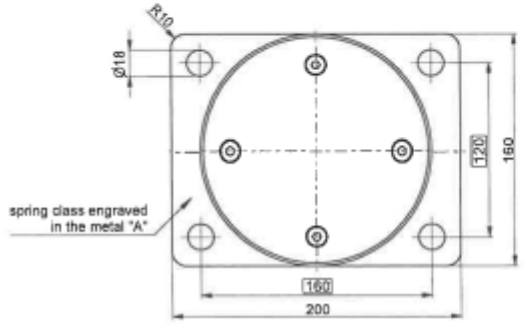

Z (2 : 1)

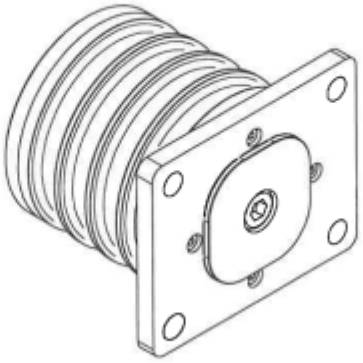

TRACTION VEHICLE

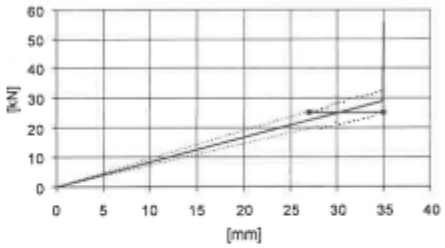

-	TRACTION VEHICLE
service load	25,17 kN
min. stiffness	720 N/mm
stiffness (±15 %)	847 N/mm
max. stiffness	1028 N/mm
max. load	55,7 kN
max. displacement	35 mm
color dot	red
class	A

stiffness measured at sub-assembly

XXX

Markings in rubber (raised):

GMT-Logo
Date of manufacture
62082001

bended
x = rubber layer max 0,5 mm
allowed

QUM TS 005 - 107
Galvanischer Überzug
Electroplated coating
without manganese steel plate

Injection nops, rubber coating and parting line burr allowable! Paint spray allowable on rubber! For components with surface coating the enlisted dimensions are valid for the status before coating. Consequently, tolerances may be exceeded by the allowable coat thickness.

CAD-Zeichnung - Zerf manuell nicht geändert werden
CAD drawing - Must not be changed manually

Maßstab / Scale: 1 : 2 | Gewicht / Weight: 13,6 kg
Material: Elastomer CP999
Materials acc. to parts list

Benennung / Description:
Querpuffer
Class A

Zeichnungsnr. / Drawing no.: 62082001
Index: 000
Model: 62082001
Sheet 1 of 1
A2

Änderungsindex / Index	Datum / Date	Name
Erstellt / Created	17.09.15	Bernhard
Geprüft / Reviewed	6.09.15	Bernhard
Freigabe / Approved	1.4.16	Jaeger

Änderungsindex / Index	Änderungsbeschreibung / Modification	Datum / Date	Name