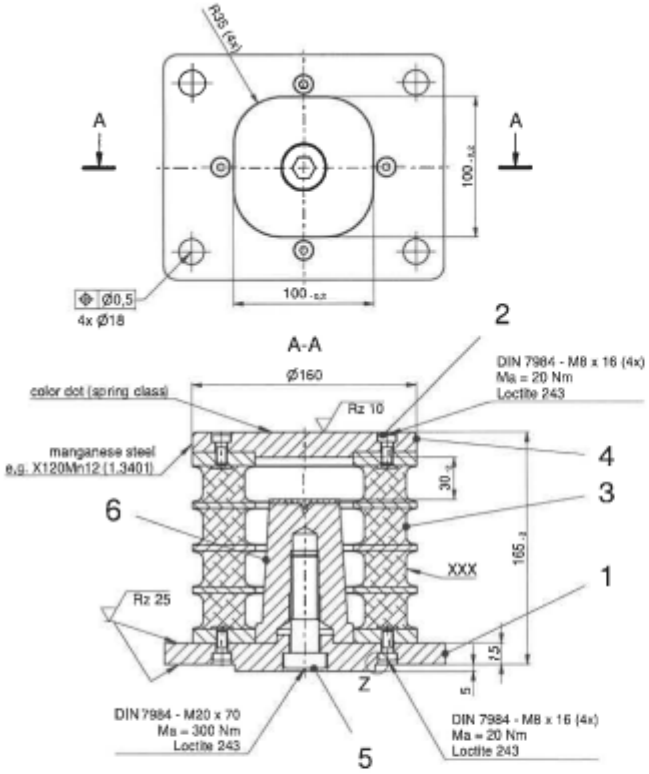

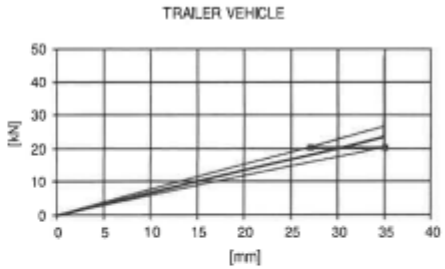

-	TRAILER VEHICLE
service load	20,41 kN
min. stiffness	585 N/mm
stiffness (±15%)	688 N/mm
max. stiffness	836 N/mm
max. load	47,7 kN
max. displacement	35 mm
color dot	yellow
class	B

stiffness measured at sub-assembly

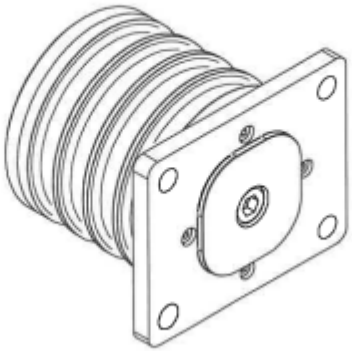

XXX

Markings in rubber (raised):
GMT-Logo
Date of manufacture
62082002

bended
x = rubber layer max 0,5 mm
allowed

QUM TS 005 - 107
Galvanischer Überzug
Electroplated coating
without manganese steel plate

Injection nips, rubber coating and parting line burr allowable! Paint spray allowable on rubber! For components with surface coating the enlisted dimensions are valid for the status before coating. Consequently, tolerances may be exceeded by the allowable coat thickness.

Maßstab / Scale: 1 : 2 | Gewicht / Weight: 13,6 kg
Material: Elastomer OP2079
Materials acc. to parts list
Bezeichnung / Description:
Querpuffer
Class B
Zeichnungsnr. / Drawing no.: 62082002
Index: 000
Blatt / Sheet 1 von / of 1
A2